TO : CUSTOMER

DATE : 2015.06.01

GREEN C&C TECH Co.,Ltd
65, Jinwisandan-ro, Jinwi-myeon,
Pyeongtaek-si, Gyeonggi-do
KOREA 451-861
TEL : 82-31-373-3623~3625
FAX : 82-31-373-3610

DOCUMENTATION FOR APPROVAL

PRODUCT	:	**A/D BOARD**
APPLICATION PANEL	:	
MODEL NAME	:	**GH675A(M1)**
GCCT NAME	:	**GCCT675MA**

APPROVAL	CHECKED	WRITTEN

PLEASE RETURN ONE DOCUMENT AFTER APPROVED SIGN

GREEN C&C TECH	SPECIFICATION GH675A(M1)	R&D DATE	2015.06.01

NO	DATE	REVISION	PAGE

REVISION HISTORY

REV.	0	0	0											
Page	15	16	17											
REV.	0	0	0	0	0	0	0	0	0	0	0	0	0	0
Page	1	2	3	4	5	6	7	8	9	10	11	12	13	14

CONTENTS

• Revision History ····· 1
1. Features ····· 3
2. General Description ····· 4
3. Block Diagram ····· 5
4. Dimension ····· 6
4.1. Main Board Dimension ····· 6
4.2. OSD Board Dimension ····· 7
5. Connectors Information ····· 8
5.1. Input Connectors ····· 8
5.2. Output Connectors ····· 9
6. Reference Data ····· 10
6.1. Limited Values ····· 10
6.2. Electrical Parameters ····· 10
7. Notation Of Lot Number ····· 11
8. Input Formats ····· 12
8.1. Video Mode Surpport ····· 12
8.2. LCD Panel & I/O ····· 12
8.3. DVI (Digital Video Interface) ····· 12
9. Keyboard Interface ····· 13
10. OSD (On Screen Display) ····· 14
11. Packing ····· 16
12. Customization ····· 17

1. FEATURES

- State of the art high performance picture quality design.
- Analog RGB, DVI
- Full CRT multi-sync monitor compatibility.
- Multi-sync capability up to XGA resolution @ 75Hz, compatible standard DOS, VGA and SVGA and XGA VESA timing.
- Expand DOS, VGA, SVGA, XGA to full screen display.
- True color (16.7M) data processing and display driving.
- Single control operated On-Screen-Display (OSD) user interface.
- Full control of all relevant display and interface parameters via OSD.
- Multi language support.
- VESA DDC 2B compliant.
- Compatible with VESA DPMS power saving modes.
- Form factor : 120mm (W) x 80mm (L) x 16mm (H)
- +12V/3A DC single power : DC power adapter recommended.
- Operating temperature : 0 to 65 ℃

Parameter	Value	Unit
Overall Dimensions		
Width	120	mm
Lenth	80	mm
Height	16	mm
Max. Output Resolution	1024 x 768, 75Hz	pixels
Input Impedance	75	Ohm
Sync. Polarities	+/-	
Supply Voltage	12	Vdc
Output Signal Type	LVDS	Vdc
Max. Number of Colors	16.7M	Colors
Operating Temperature	0 ~ 65	℃
Storage Temperature	-20 ~ 70	℃

2. GENERAL DESCRIPTION

The GH675A(M1) is an advanced LED Monitor Control Board.
This design enables a full conventional LCD monitor with a LED module.
It is suitable for video resolution up to XGA @ 75Hz in all video modes
and the full display area of the module is used.
The design is implemented as a single printed circuit board.
The GH675A(M1) is designed to support various LEDs under XGA resolution by BIOS option,
customers line-up their monitors with their own identity with following options.

No	Item	Description		Remark
1	Model Name	GH675A(M1)		
2	LCD Module	XGA		LVDS
3	Signal Input	Analog RGB / DVI Input		
4	Resolution support	H : 30 ~ 60 KHz		
		V : 56 ~ 75 Hz		
5	OSD Control	Menu, Up, Down, Select, Power		
	Plug & Play	VESA DDC 2B		
6	Signal Connector	Analog	D-SUB 15P	
		Digital	DVI-D	

3. BLOCK DIAGRAM

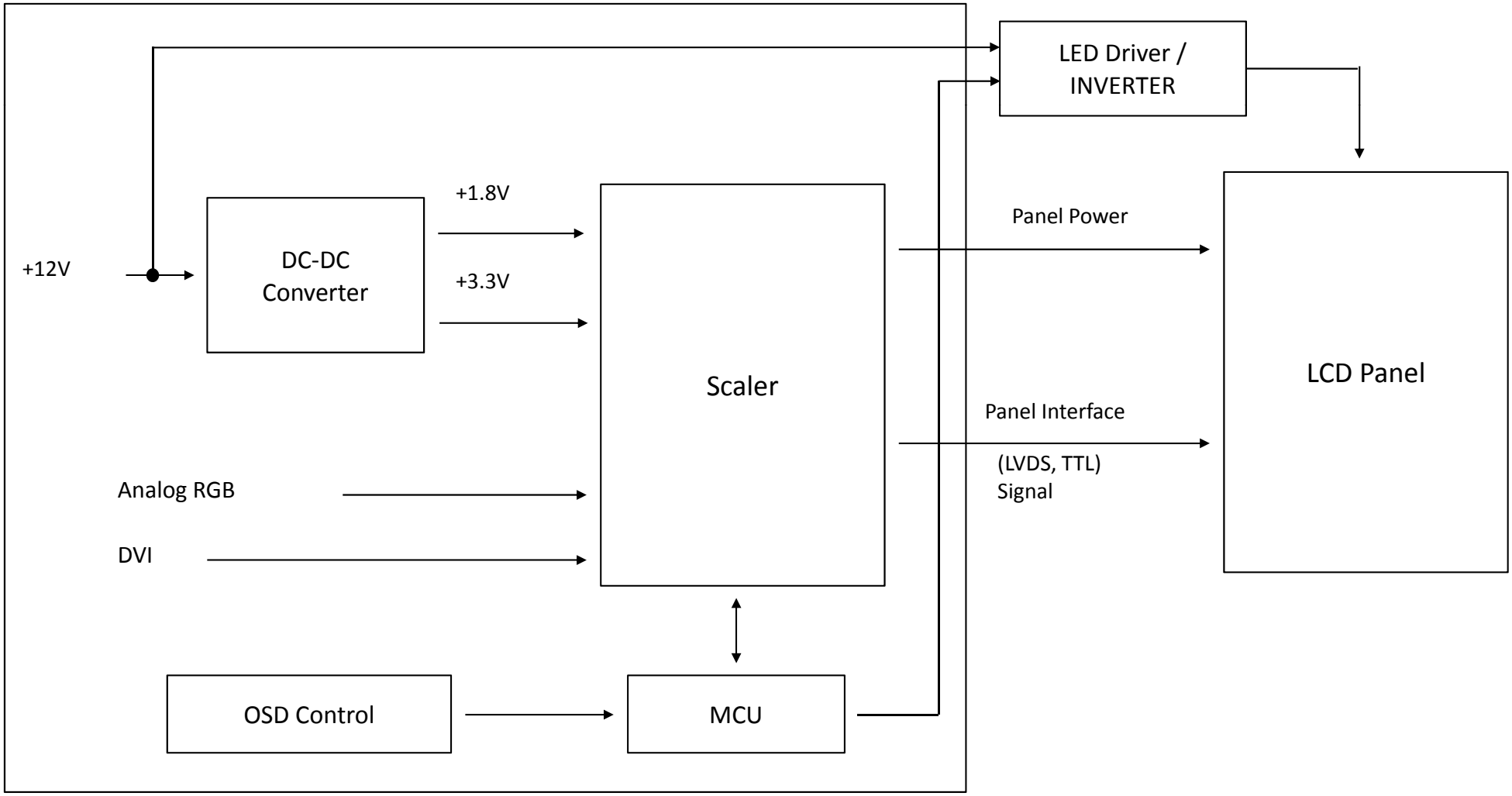

4. DIMENSION

4.1. MAIN BOARD DIMENSION (120mm (W) x 80mm (L) x 16mm (H))

(Tolerance : +0.8mm, -0.2mm)

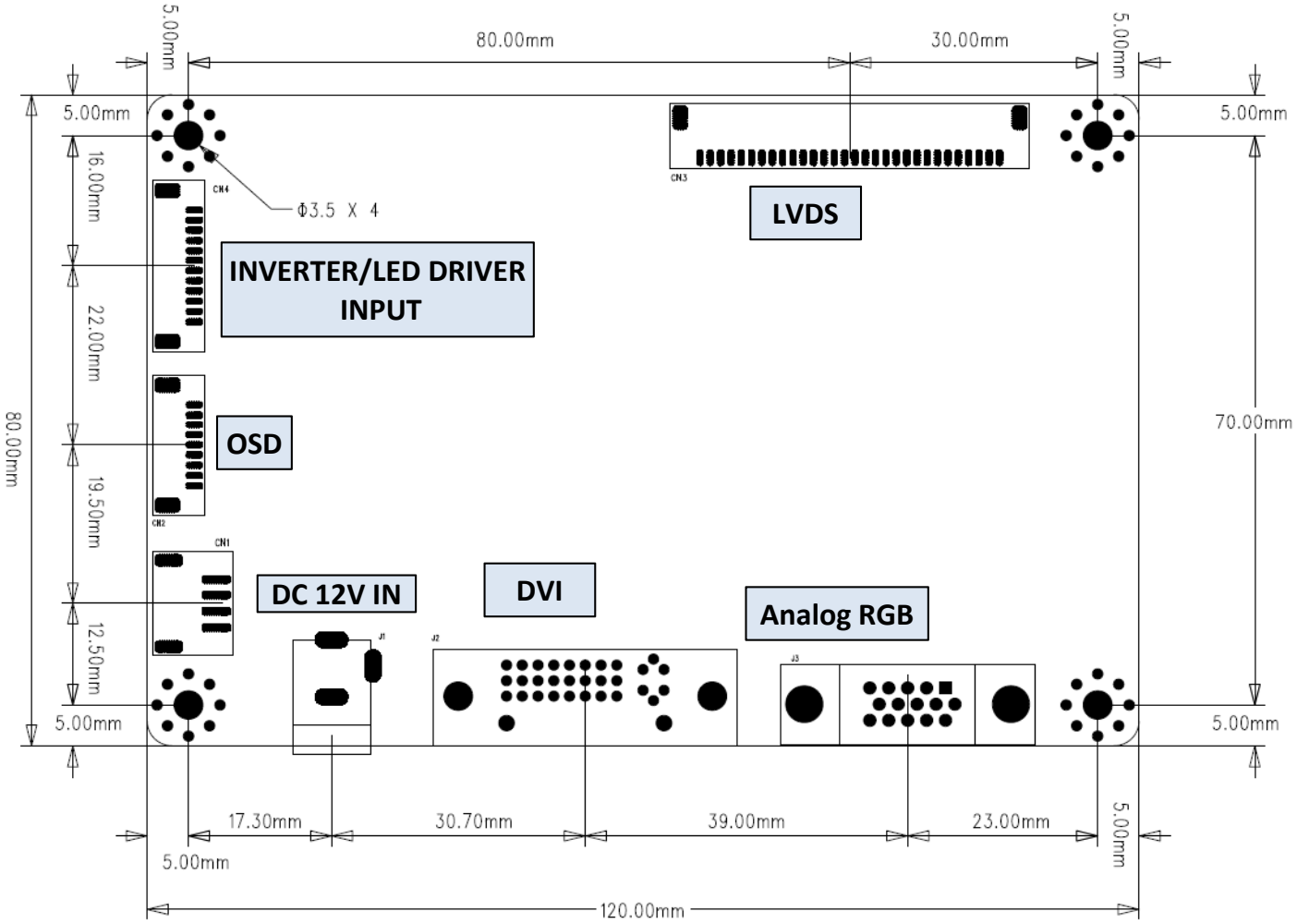

4.2. OSD BOARD DIMENSION (110mm (W) x 20mm (L) x 9.0mm (H))

(Tolerance : +0.8mm, -0.2mm)

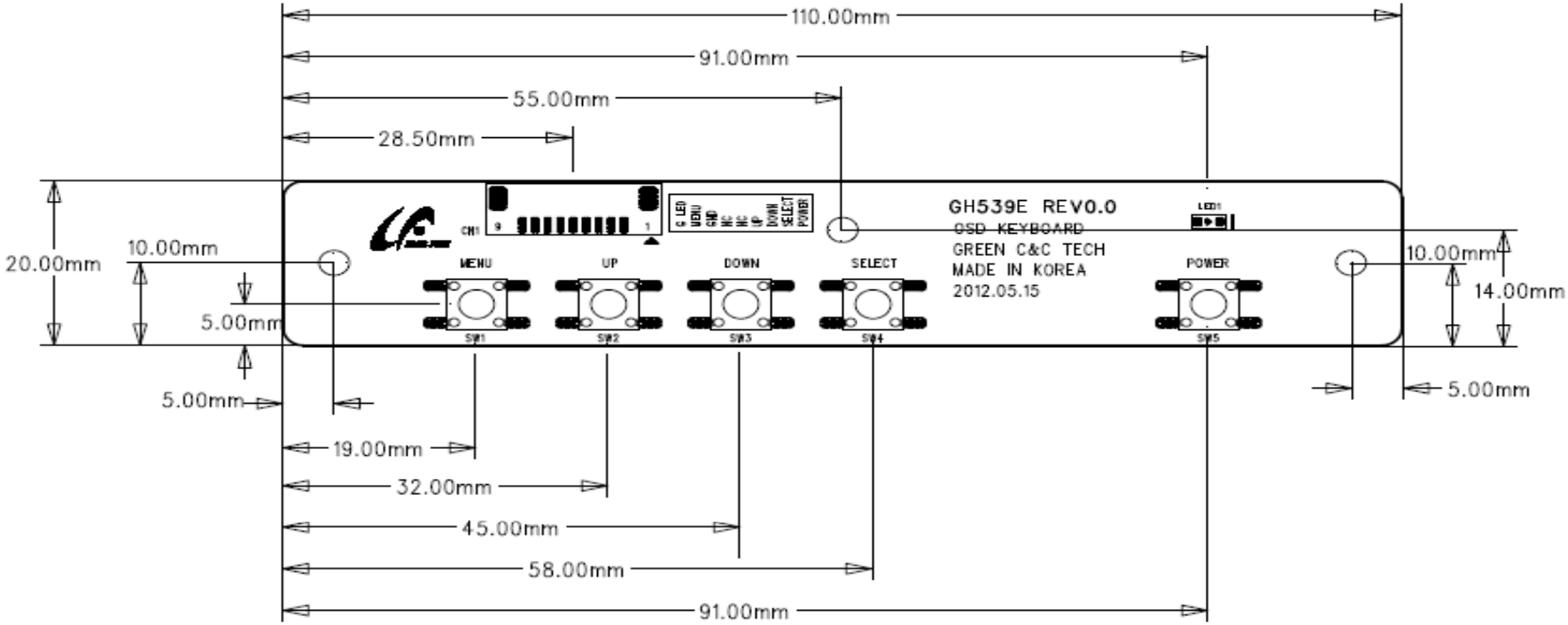

5. CONNECTORS INFORMATION

5.1. INPUT CONNECTORS

5.1.1. DC Power Connector (J1) : DC JACK 2.5Φ (BTOB) or Equivalent

Pin no.	Function	Pin no.	Function	Pin no.	Function
1	VCC (DC12V)	2	GND	3	GND

5.1.2. DVI-D Connector (J2) : DS1091 (BTOB) or Equivalent

Pin no.	Function	Pin no.	Function	Pin no.	Function
1	DATA2-	2	DATA2+	3	GND
4	N/C	5	N/C	6	DDC SCL
7	DDC SDA	8	N/C	9	DATA1-
10	DATA1+	11	GND	12	N/C
13	N/C	14	+5V	15	SYNC DETECT
16	+5V	17	DATA0-	18	DATA0+
19	GND	20	N/C	21	N/C
22	GND	23	CLOCK-	24	CLOCK+

5.1.3. Analog RGB Connector (J3) : DS1083-1 (BTOB) or Equivalent

Pin no.	Function	Pin no.	Function	Pin no.	Function
1	RED	2	GREEN	3	BLUE
4	GND	5	GND	6	GND (RED)
7	GND (GREEN)	8	GND (BLUE)	9	N/C
10	GND	11	GND	12	SDA
13	H-SYNC	14	V-SYNC	15	SCL

5.1.4. DC Power Connector (CN1) : 20022WR-04 (YEONHO) or Equivalent

Pin no.	Function	Pin no.	Function	Pin no.	Function
1	GND	2	DIM	3	GND
4	ON/OFF	5	GND	6	GND
7	N/C	8	GND	9	GND
10	VCC (DC12V)	11	VCC (DC12V)	12	VCC (DC12V)

5.2. OUTPUT CONNECTORS

5.2.1. OSD Connector (CN2) : 12505WR-09 (YEONHO) or Equivalent

Pin no.	Function	Pin no.	Function	Pin no.	Function
1	GREEN LED	2	GND	3	MENU
4	N/C	5	N/C	6	UP
7	DOWN	8	SELECT	9	POWER

5.2.2. LVDS Connector (CN3) : 12507WR-H30G (YEONHO) or Equivalent

Pin no.	Function	Pin no.	Function	Pin no.	Function
1	VCC (3.3V)	2	VCC (3.3V)	3	VCC (3.3V)
4	GND	5	GND	6	GND
7	GND	8	RXE3+	9	RXE3-
10	RXEC+	11	RXEC-	12	RXE2+
13	RXE2-	14	GND	15	RXE1+
16	RXE1-	17	GND	18	RXE0+
19	RXE0-	20	RXO3+	21	RXO3-
22	RXOC+	23	RXOC-	24	GND
25	RXO2+	26	RXO2-	27	RXO1+
28	RXO1-	29	RXO0+	30	RXO0-

5.2.3. INVERTER INPUT Connector (CN4) : 12505WR-12 (YEONHO) or Equivalent

Pin no.	Function	Pin no.	Function	Pin no.	Function
1	GND	2	DIM	3	GND
4	ON/OFF	5	GND	6	GND
7	N/C	8	GND	9	GND
10	VCC (DC12V)	11	VCC (DC12V)	12	VCC (DC12V)

6. REFERENCE DATA

6.1. LIMITED VALUES

Symbol	Description	Min	Max	Unit
VDD	+12V DC Power supply	10.8	13.2	V
IDD	Input current	0	3.5	A
$V_{i(RGB)}$	Video input signal	0.5	3	Vdc

6.2. ELECTRICAL PARAMETERS

Symbol	Description	Min	Typ	Max	Unit
VDD	+12V DC Power supply	10.8	12.0	13.2	V
$V_{i(RGB)}$	Video input signal	0.5	0.7	1.0	V_{PP}
f_S	Input Video Sample Rate	-	-	80	MHz
f_{HS}	Horizontal Sync Frequency	30	-	60	KHz
f_{VS}	Vertical Sync Frequency	56	-	75	Hz
F_{SIH}	Sync Input High Level	2.5	-	3.0	Vdc
V_{SIL}	Sync Input Low Level	0	-	0.8	Vdc
I_{DD2}	Supply Current +12V	-	-	3.5	A

7. NOTATION OF LOT NUMBER

NOTATION : BOTTOM OF PCB

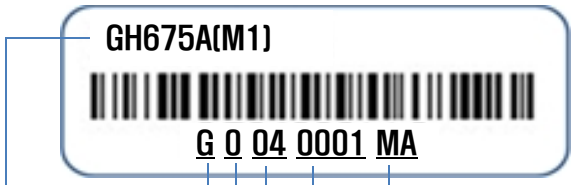

GH476A(M1)	: USER MODEL CODE
G	: MANUFACTURER CODE (GREEN C&C TECH.)
0	: YEAR OF PRODUCT 0 → 2010 , 1 → 2011 , ... , 5 → 2015
04	: WEEK OF PRODUCT 01,02,03,04,...52
0001	: SERIAL NUMBER 0001,0002.....9998,9999
MA	: GCCT MODEL CODE (GCCT675MA)

8. INPUT FORMATS

8.1. VIDEO MODE SUPPORT

The GH675A(M1) can support any video mode within the folowing input constraints :

1. Signal sample frequency with the input ≤ 80 MHz

2. Horizontal sync frequency between 30 KHz and 60 KHz

The modes are detected with the presentation of the input and previous alignments for setup are automatically recalled. A true multi-sync monitor emulation is implemented.

Mode	Resolution	Refresh Rate	H-Freq.	Pixel Freq.	Remark
VGA	640 x 350	70 Hz	31.47 KHz	25.175 MHz	VESA Standard
VGA	720 x 400	59.940 Hz	31.47 KHz	25.175 MHz	IBM VGA 3H
VGA	640 x 480	60 Hz	31.5 KHz	25.175 MHz	Industry Standard
VGA	640 x 480	67 Hz	35.0 KHz	30.240 MHz	Apple Machintosh
VGA	640 x 480	72 Hz	37.9 KHz	31.500 MHz	VESA Standard
VGA	640 x 480	75 Hz	37.5 KHz	31.500 MHz	VESA Standard
VGA	832 x 624	74.6 Hz	49.7 KHz	55.000 MHz	Apple Machintosh
SVGA	800 x 600	56 Hz	35.2 KHz	36.000 MHz	VESA Guidelines
SVGA	800 x 600	60 Hz	37.9 KHz	40.000 MHz	VESA Guidelines
SVGA	800 x 600	72 Hz	48.1 KHz	50.000 MHz	VESA Standard
SVGA	800 x 600	75 Hz	46.9 KHz	49.500 MHz	VESA Standard
XGA	1024 x 768	60 Hz	48.4 KHz	65.000 MHz	VESA Guidelines
XGA	1024 x 768	70 Hz	56.5 KHz	75.000 MHz	VESA Standard
XGA	1024 x 768	75 Hz	60.0 KHz	78.750 MHz	VESA Standard

Notes :

1. All mentioned mode are non-interaced. The maximum and minimum frame rates are decided by the LCD Panel.
2. Factory preset modes are overwritten by additional user alignments for automatic recall.
   The factory preset modes can be recalled at any time.

8.2. LCD PANEL & I/O

The GH675A(M1) is an advanced and general application LCD Monitor Control board. This borad operates with LVDS interface panel ranging from VGA to XGA that can be driver with three or less timing signals. The usual timing signals to the panel are H-sync, V-sync and Data Enable.

8.3. DVI (DIGITAL VIDEO INTERFACE)

The GH675A(M1) has one DVI input port which complies with VESA DVI standard. Therefore, users can make direct interface to the DVI output of Digital VGA cards.

9. KEYBOARD INTERFACE

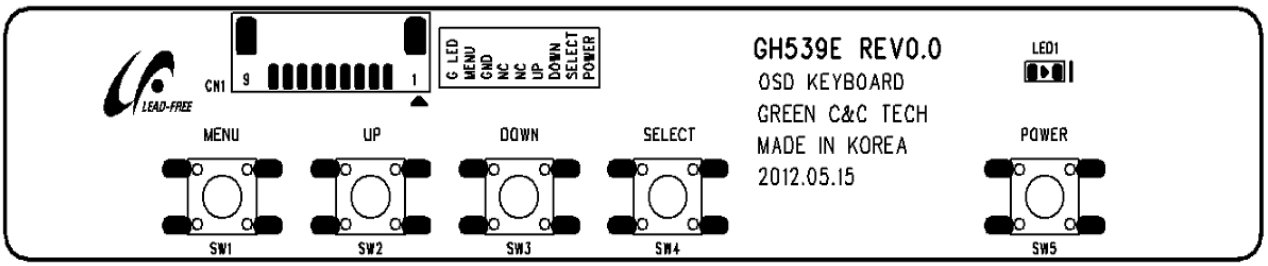

9.1 POWER

- Monitor power ON/OFF Key function

9.2 LED

- Diplay Green color

9.3 UP

- UP Key function (in OSD main menu)

9.4 DOWN

- a. OSD main menu : DOWN Key function
b. No OSD : Brightness Hotkey - Adjust brightness of the screen

9.5 SELECT

- a. OSD main menu : Enter/Select Key function
b. No OSD : Automatically make adjustments to the horizontal and vertical size, horizontal and vertical position/phase

9.6 MENU

- a. OSD main menu : Return to the previous menu (Exit Key function)
b. No OSD : This button will enable the main OSD menu

10. OSD (ON SCREEN DISPLAY)

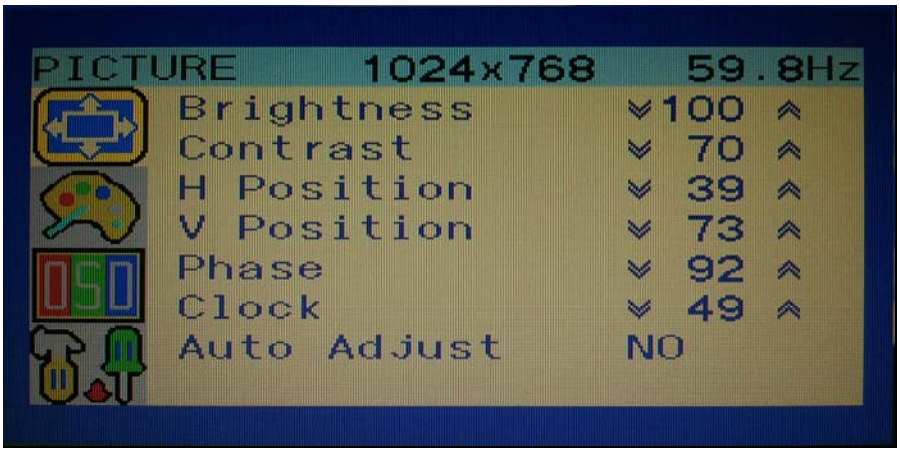

PICTURE MENU

COLOR MENU

Main Menu	Sub Menu	Description
PICTURE	Brightness	- Adjust the brightness of the screen.
	Contrast	- Adjust the contrast of the screen.
	H Position	- Adjust the horizontal position of the screen's image.
	V Position	- Adjust the vertical position of the screen's image.
	Phase	- Adjust the focus of the screen's image.
	Clock	- Adjust the horizontal size of the screen's image.
	Auto Adjust	- Auto configuration of geometry. - Automatically adjusted items are : a) Clock, b) Phase, c) Position is centered
COLOR	Color Temp	- Choice of Bluish, Reddish and user's option is chosen, RGB can be adjusted. - User : Able to adjust the color by controlling Red, Green, Blue.
	Red	- Adjust Red of the screen.
	Green	- Adjust Green of the screen.
	Blue	- Adjust Blue of the screen.
	Auto Color	- Color automatically set from strange input signal.

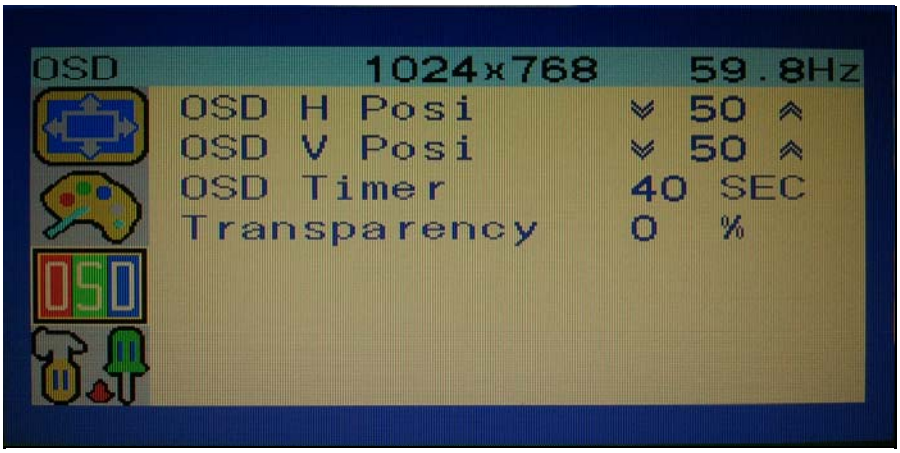

OSD MENU

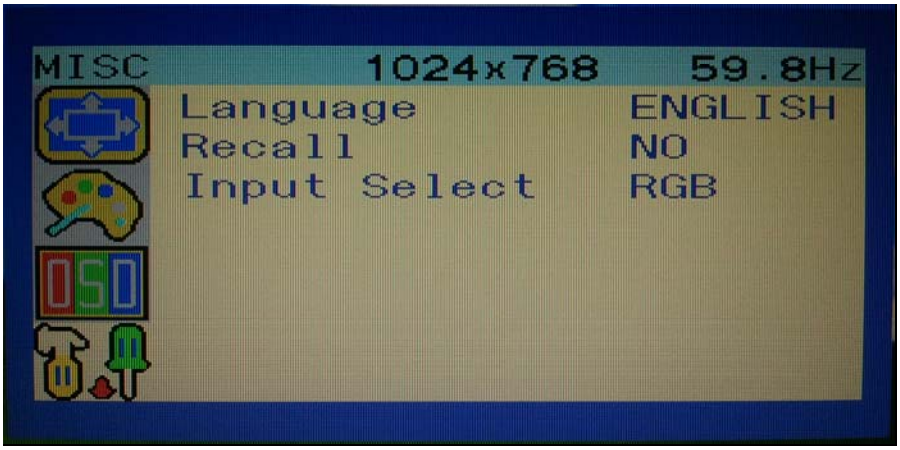

MISC MENU

Main Menu	Sub Menu	Description
OSD	OSD H Posi	- Adjust the horizontal position of OSD menu by value.
	OSD H Posi	- Adjust the vertical position of OSD menu by value.
	OSD Timer	- The range of controlling the duration time of the OSD menu.
	Transparency	- Adjust the transparency of OSD.
MISC	Language	- Select the language of OSD menu. (English, German, French, Spanish, Korean, Japanese)
	Recall	- Initial set-up, preset by the factory before fowarding.
	Input Select	- Select input signal source. Analog RGB / DVI

11. PACKING

11.1. BOX

1. Customer	
2. PART NAME	GH675A(M1)
3. PO NO	
4. Q'ty	000 EA
5. Date	00.00.00
6. LOT NO	

L/C NO :
C/T NO :
MADE IN KOREA

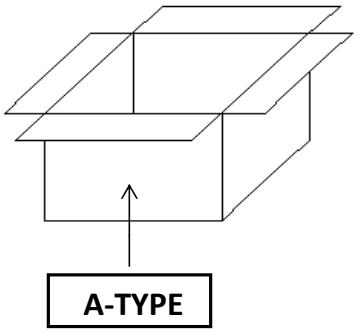

11.2. TRAY

SYMBOL	TYPE NO
PACKING-TRAY	395*320*53
PACKING-BOX	415*340*332

1 TRAY : 20EA
1 BOX : 3 TRAY (60EA)

12. CUSTOMIZATION

Based on customer's request, GREEN C&C TECH supports customization for GH675A(M1) board configuration, harness connection & length, DDC and OSD menu.
Generally, it requires 1 month lead time after finalizing customization specification.
Details should be agreed by both parties.